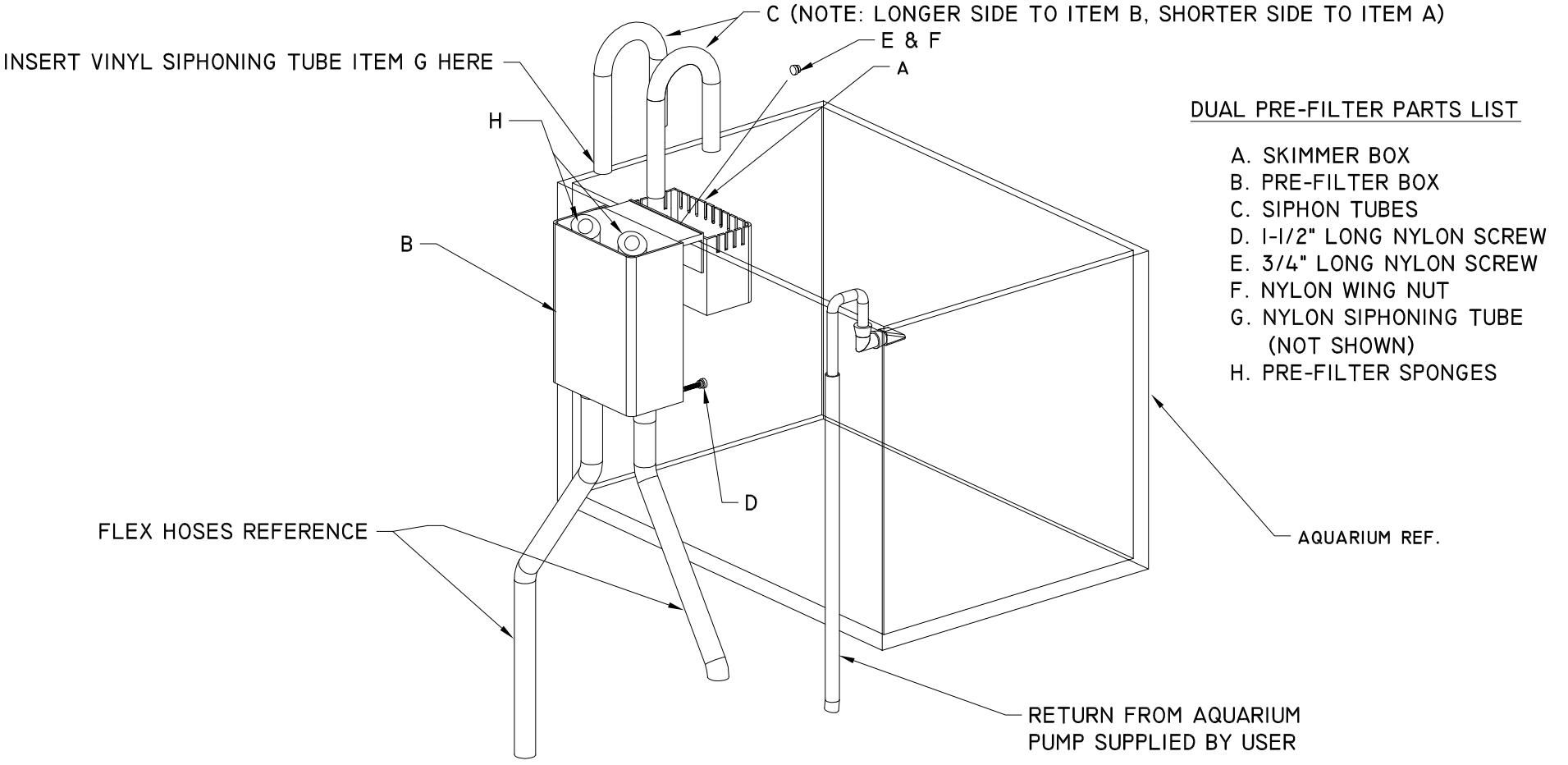

MODEL 200, 300 & 400 DUAL PRE-FILTER-FIGURE 1